Electric trucks

KBE 20N KBE 25N

1.1	Manufacturer		KION BAOLI	KION BAOLI
1.2	Manufacturer's type designation		KBE 20N	KBE 25N
1.3	Drive: electric, diesel, petrol, fuel gas		Electric	Electric
1.4	Operator type: hand, pedestrian, standing, seated, order-picker		Seated	Seated
1.5	Rated capacity / Rated load	Q (t)	2,0	2.5
1.6	Load centre distance	c (mm)	500	500
1.8	Load distance, centre of drive axle to fork	x (mm)	434	434
1.9	Wheelbase	y (mm)	1495	1495
2.1	Service weight	Kg	3835	4100
2.2	Axle loading, laden front/rear	Kg	4933/852	5920/700
2.3	Axle loading, unladen front/rear	Kg	1684/2101	1780/2320
3.1	Tyres: solid rubber, superelastic, pneumatic, polyurethane		PN	PN
3.2	Tyre size, front		23X9-10	23X9-10
3.3	Tyre size, rear		18x7-8	18x7-8
3.5	Wheels, number front/rear (x = driven wheels)		2x/2	2x/2
3.6	Tread, front	b10 (mm)	1040	1040
3.7	Tread, rear	b11 (mm)	950	950
4.1	Tilt of mast/fork carriage forward/backward	α/β (°)	6/10	6/10
4.2	Height, mast lowered	h1 (mm)	2050	2050
4.3	Free lift	h2 (mm)	100	100
4.4	Lift	h3 (mm)	3000	3000
4.5	Heigh, mast extended	h4 (mm)	4040	4040
4.7	Height of overhead guard (cabin)	h6 (mm)	2137	2137
4.8	Seat height/stand height	h7 (mm)	1133	1133
4.12	Coupling height	h10 (mm)	235	235
4.19	Overall length	l1 (mm)	3355	3355
4.20	Length to face of forks	l2 (mm)	2285	2285
4.21	Overall width	b1/b2 (mm)	1258	1258
4.22	Fork dimensions ISO 2331	s/e/l (mm)	40/122/1070	40/122/1070
4.23	Fork carriage ISO 2328, class/type A, B		II A	II A
4.24	Fork carriage width	b3 (mm)	1040	1040
4.31	Ground clearance, laden, below mast	m1 (mm)	75	75
4.32	Ground clearance, centre of wheelbase	m2 (mm)	113	113
4.34.1	Aisle width for pallets 1000 x 1200 crossways	Ast (mm)	3740	3740
4.34.2	Aisle width for pallets 800 x 1200 crossways	Ast (mm)	3940	3940
4.35	Turning radius	Wa (mm)	2160	2160
4.36	Internal turning radius	b13 (mm)	-	-
5.1	Travel speed, laden/unladen	km/h	13.1/13.9	13.1/13.9
5.2	Lift speed, laden/unladen	m/s	0,290/0,390	0,290/0,390
5.3	Lowering speed, laden/unladen	m/s	0,440/0,480	0,440/0,480
5.8	Max gradeability, laden/unladen	%	15/20	15/20
5.10	Service brake		Electromechanical	Electromechanical
6.1	Drive motor rating S2 60 min	kW	7.6	7.6
6.2	Lift motor rating at S3 15%	kW	10	10
6.4	Battery voltage/nominal capacity K5	V/Ah	48 / 630/700	48 / 630/700
6.5	Battery weight	kg	1010~1160	1010~1160
10.1	Operating pressure for attachments	bar	160	160
10.7	Sound pressure level at driver's seat	dB (A)	65	65

Electric trucks

KBE 20N							
Mast type	H3	Rated Capacity - Load center 500 mm	H1	H4 with load backrest	H2 without load backrest	H2 with load backrest	Mast angle Front/ back
VM Tele	3000	2000	2040	4040	140	140	6/12
	3300	2000	2190	4340	140	140	6/12
	3500	2000	2290	4540	140	140	6/12
	3600	2000	2340	4640	140	140	6/12
	4000	1900	2590	5040	140	140	6/8
	4500	1600	2840	5540	140	140	6/6
VFM 2 stage	3000	2000	2040	4040	1450	1040	6/12
	3300	2000	2190	4340	1600	1190	6/12
	3500	2000	2290	4540	1700	1290	6/12
	4000	1900	2590	5040	2000	1590	6/8
	4500	1600	2840	5540	2250	1840	6/6
VFHM triplex	4000	1800	1965	5040	1351	965	6/6
	4350	1700	2090	5390	1476	1090	6/6
	4500	1600	2140	5540	1526	1140	6/6
	4700	1400	2205	5740	1591	1205	6/6
	4800	1400	2240	5840	1626	1240	6/6
	5000	1300	2383	6040	1769	1383	6/6
	5400	1100	2583	6440	1969	1583	3/6
	5500	1100	2617	6540	2003	1617	3/6
	6000	600	2850	7040	2236	1850	3/6

KBE 25N							
Mast type	H3	Rated Capacity - Load center 500 mm	H1	H4 with load backrest	H2 without load backrest	H2 with load backrest	Mast angle Front/ back
VM Tele	3000	2500	2040	4040	140	140	6/12
	3300	2500	2190	4340	140	140	6/12
	3500	2500	2290	4540	140	140	6/12
	3600	2500	2340	4640	140	140	6/12
	4000	2300	2590	5040	140	140	6/8
	4500	1800	2840	5540	140	140	6/6
VFM 2 stage	3000	2500	2040	4040	1450	1040	6/12
	3300	2500	2190	4340	1600	1190	6/12
	3500	2500	2290	4540	1700	1290	6/12
	4000	2300	2590	5040	2000	1590	6/8
	4500	1800	2840	5540	2250	1840	6/6
VFHM triplex	4000	2200	1965	5040	1351	965	6/6
	4350	1900	2090	5390	1476	1090	6/6
	4500	1800	2140	5540	1526	1140	6/6
	4700	1600	2205	5740	1591	1205	6/6
	4800	1600	2240	5840	1626	1240	6/6
	5000	1400	2383	6040	1769	1383	6/6
	5400	1200	2583	6440	1969	1583	3/6
	5500	1100	2617	6540	2003	1617	3/6
	6000	700	2850	7040	2236	1850	3/6

KBET

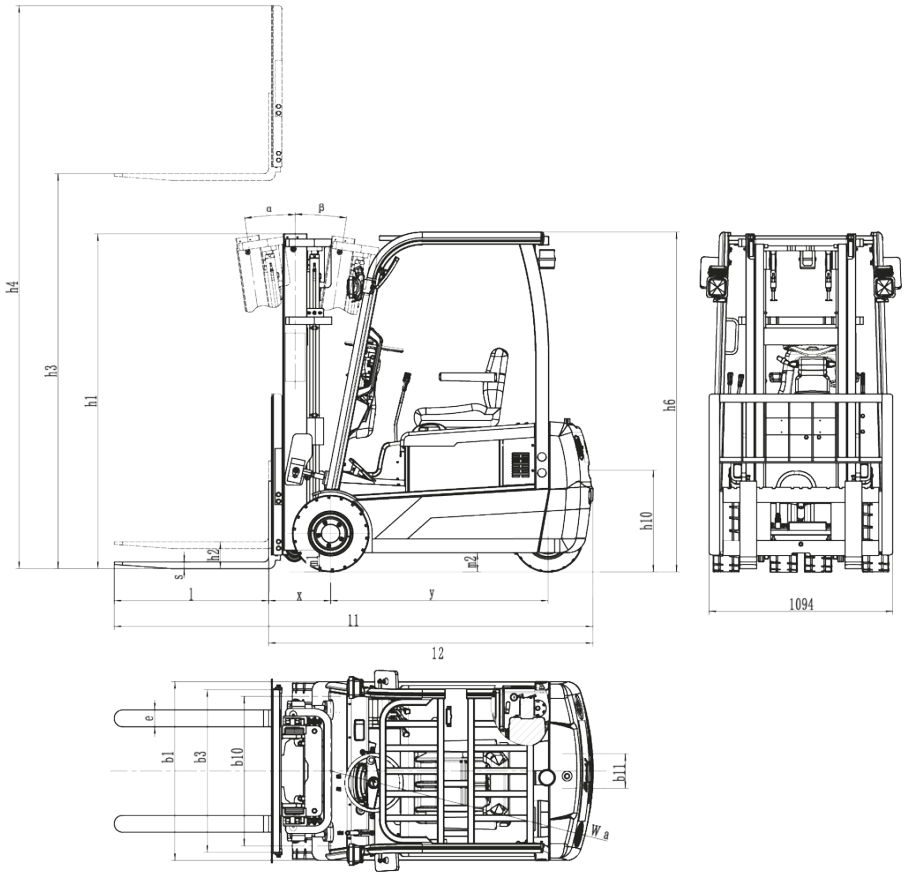
h4
h3
h1
h6
h10
h2
s
m1
m2
l
x
y
l1
l2
1094
e
b1
b3
b10
b11
W a

KBE

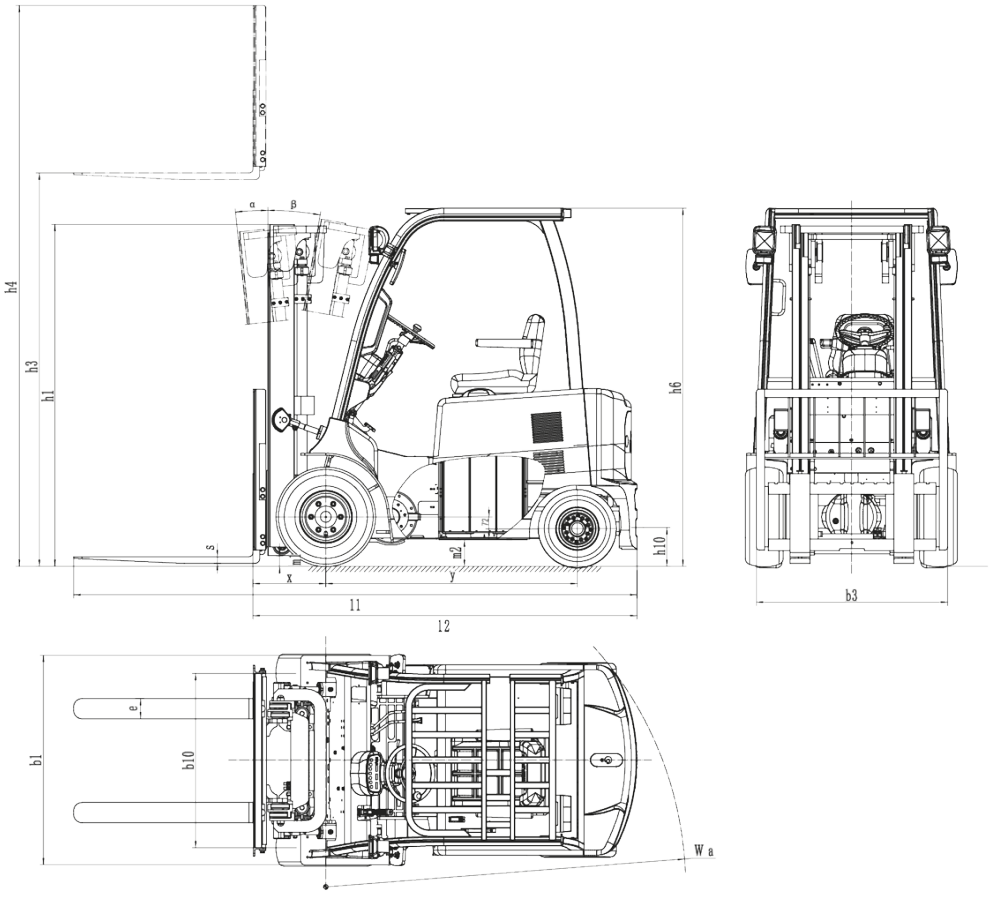
h4
h3
h1
h6
h10
s
m1
m2
x
y
l1
l2
b3
e
b1
b10
W a